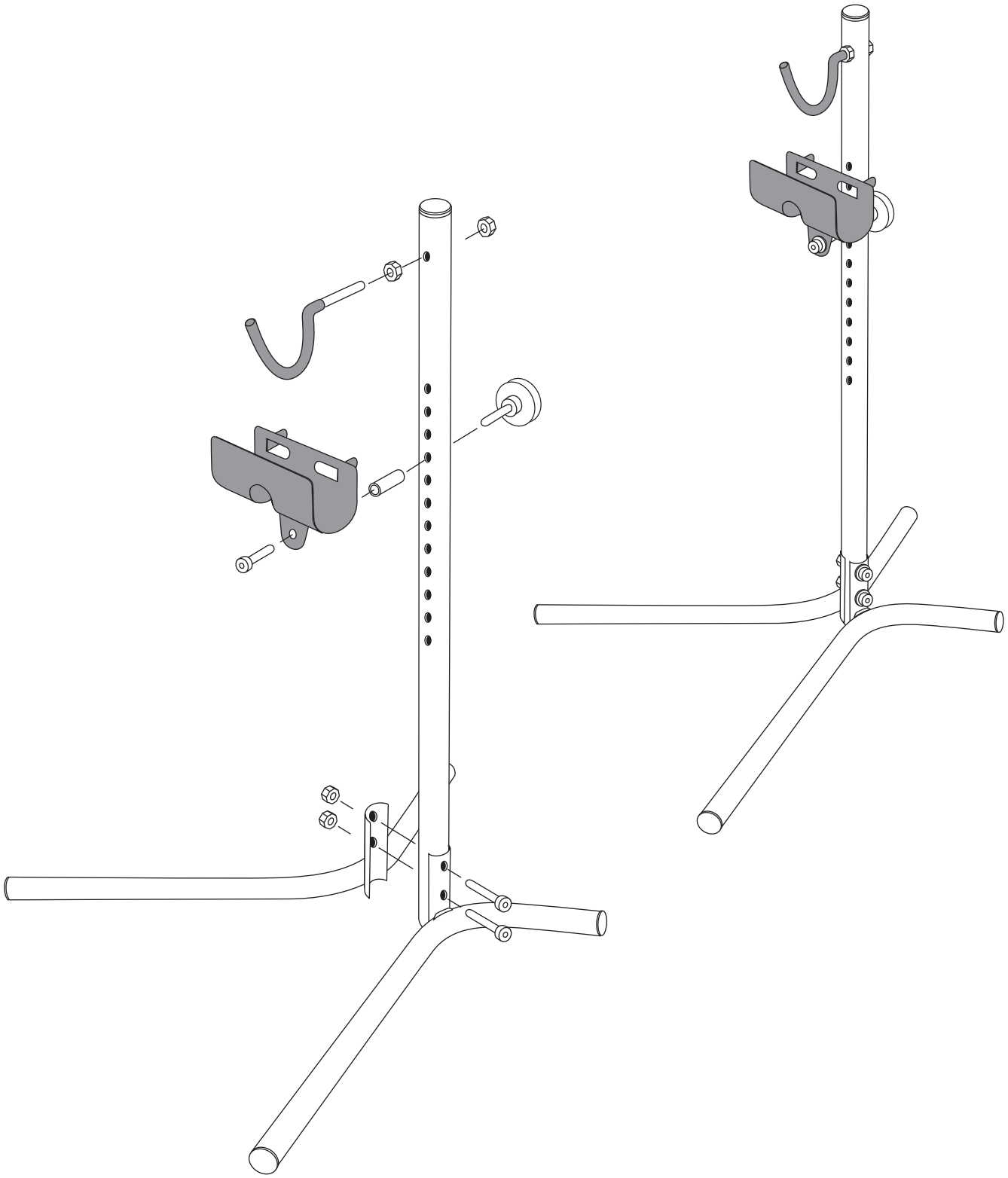

DELTA	Assembly Drawing	**DRAWN BY:** PJK	**Page#**
c Copyright Delta Cycle Corp. 2002	**PART:** RS1010 "MATISSE"	**DATE:** 11 / 06 / 02	